Tunnel shadowless Illumination
-T Series

Features

- Excellent shadowless effect
- Wide lighting area
- Excellent uniformity

Applications

- Especially suitable for detecting surface reflective and irregular objects
- Metal surface inspection

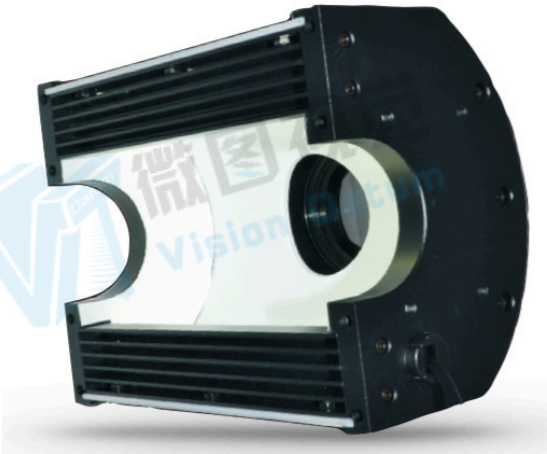

Examples of Pi Light Images

Metal sign detection

Metal fork inspection

Food packaging can exterior inspection

Lighting Structure

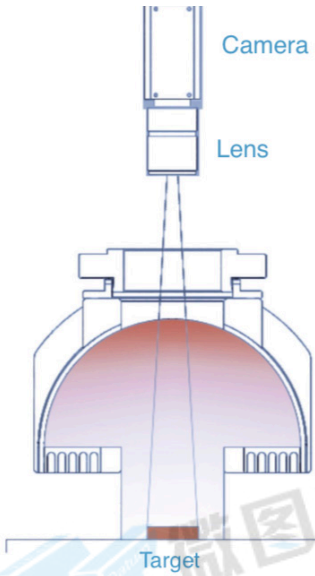

Model No.	Light Area (mm)		Voltage (v)	Power cons. (w)	Dimensions		
	Length	width			Outer diam. (mm)	Inner diam. (mm)	Height (mm)
VT-LT2-T12060W	120	60	24	10	140	108	87.3
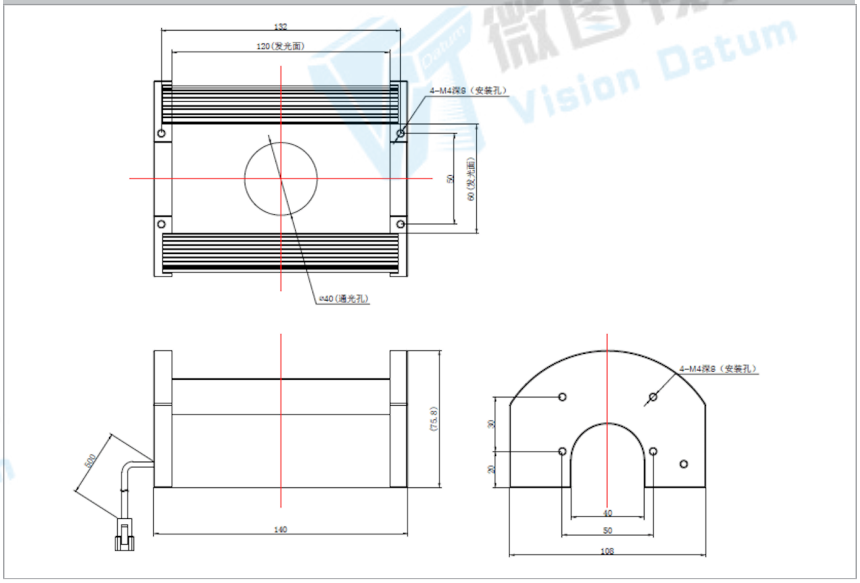
VT-LT2-T12060W